THE CUBE INSTALLATION REQUIREMENTS

The below requirements are for the elevator model The Cube. The external dimensions of the Cube is 36" x 36" (0.91 m x 0.91 m)

- Minimum height required at bottom floors is 92" (2,34 m).
- Minimum height required at the upper floor is 107" (2,70 m).
- Dimensions of finished through floor hole must be 38" x 38" (0.97 m x 0.97 m).
- The electric feed shall be 220VAC - 240VAC single phase through an independent line of conductors of AWG N 10 (6 mm); there shall be ground connection and thermo-magnetic switch of 30A to be used exclusively for the elevator. The electrical supply is to be near the head (elevator's top portion) and it is required to leave the female electrical receptacle at the top center of the elevator.
- It is strongly recommended that a buck boost or voltage stabilizer be installed along with the electrical work to prevent any damage to electrical components due to voltage fluctuation.
- There must be an opening to make way for the elevator sections of 38" (0.97 m) in width and of 92" (2,34 m) in height down to the ground floor. This access may be through door or window openings.
- Install a hook to bear 1,800 lbs. at the ceiling where the elevator is to be installed to lift the elevator sections. If it is impossible to install this hook, the minimum height at the last level shall be at least 109" (2,75 m).
- In no case must the perforation of the ceiling be less than 6" (15 cm) from the wall, in order to allow for the installation tripod.

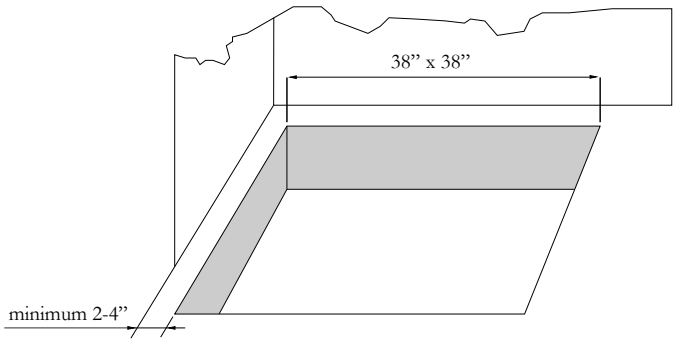

All requirements for the split unit model (remote location of head unit) are the same as the standard model except for the following...

- Minimum height required at the upper floor is 97" (2,47 m).
- Required space for remote location of head unit in attic or adjacent closet is 34" L x 24" W x 24" H (0.86 m x 0.61 m x 0.61 m)
- Remote location of head unit can be accommodated up to 30 linear feet (10 m) away from the elevator.
- Split unit connections require two 4" (10 cm) PVC pipes to run the distance from the top of the upper floor split plate to the remote location of the head unit.
- Machinery can be installed inside the home or on the exterior with the outdoor machinery package (controller needs to be installed in a climate controlled space).
- If installing housing over the machinery in the attic, there should be a minimum of 2-4" of clear space on all sides of the machinery.
- Electrical power supply to be provided within direct access to remote location of head unit.

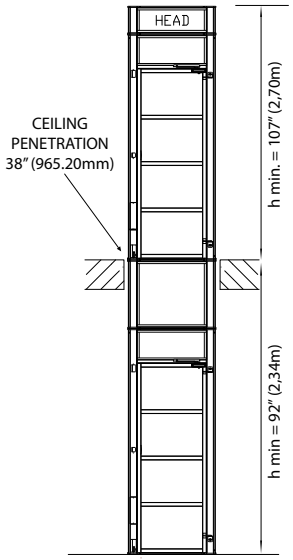

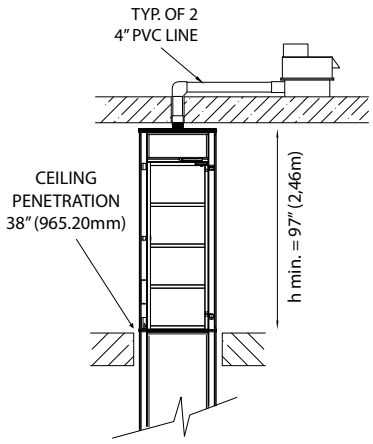

Split-Unit Model

Vacuum Pump's Box
34" L x 24" W x 24" H
4" PVC Pipes

Information listed in this document is standard/generic information.
Customizations are available per request. Please speak to a PVE Sales Manager for further information.

Revision 1 - 2024

4151 West 108th Street, Suite #1, 33018 | E-mail: info@vacuumelevators.com | Telephone: (305) 884-1091